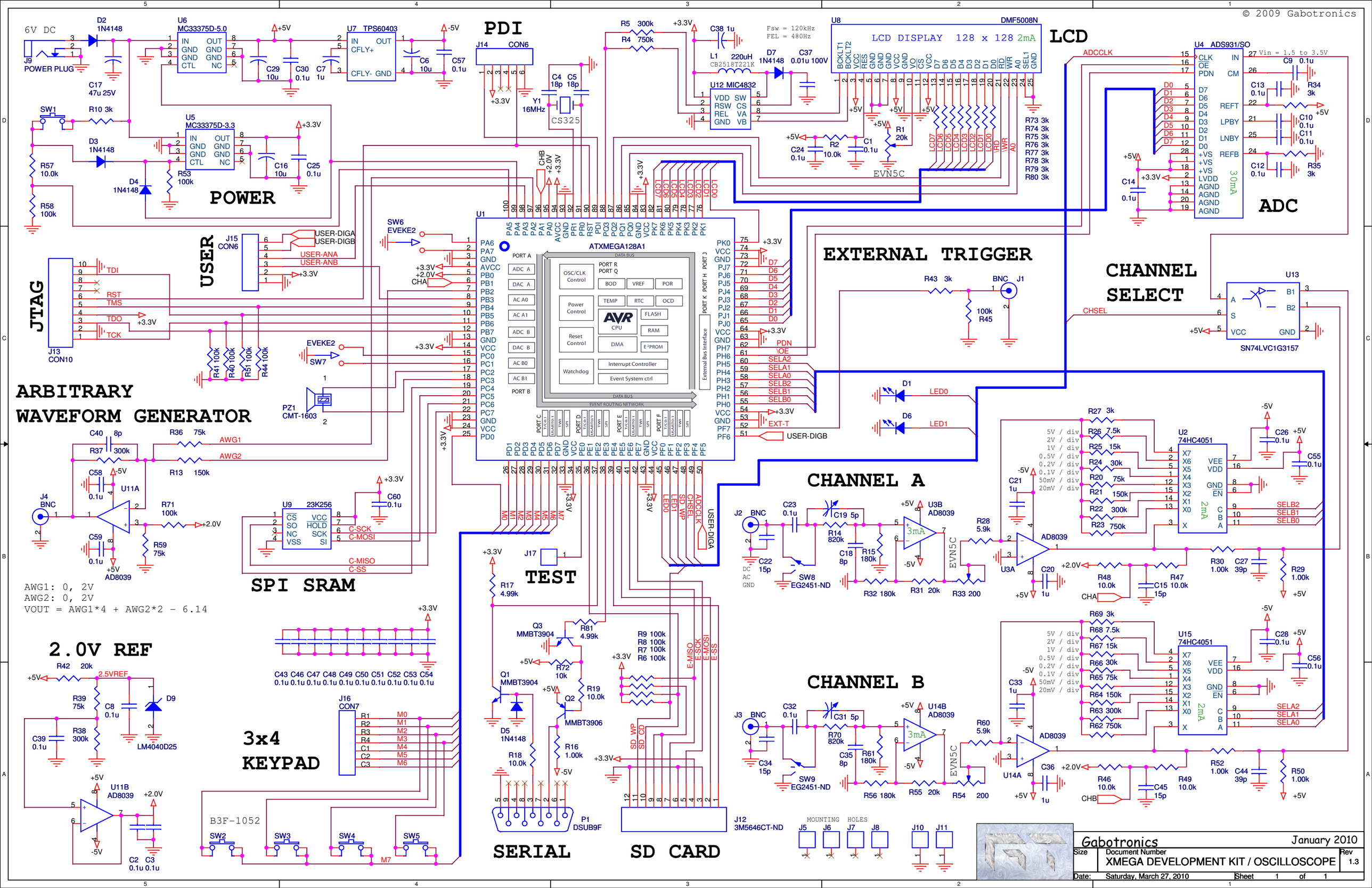
© 2009 Gabotronics
6V DC
J9 POWER PLUG
D2 1N4148
C17 47u 25V
U6 MC33375D-5.0
IN OUT GND GND GND GND CTL NC
C29 10u
C30 0.1u
C7 1u
U7 TPS60403
IN OUT CFLY+ CFLY- GND
C6 10u
C57 0.1u
+5V
-5V
POWER
SW1
R10 3k
D3 1N4148
D4 1N4148
R57 10.0k
R58 100k
U5 MC33375D-3.3
R53 100k
C16 10u
C25 0.1u
+3.3V
PDI
J14 CON6
C4 18p
C5 18p
Y1 16MHz
CS325
R5 300k
R4 750k
C38 1u
L1 220uH CB2518T221K
D7 1N4148
C37 0.01u 100V
Fsw = 120kHz
FEL = 480kHz
U12 MIC4832
VDD SW RSW CS REL VA GND VB
LCD
U8 DMF5008N
LCD DISPLAY 128 x 128 2mA
BCKLT1 BCKLT2 VCC RES GND GND GND VCC GND VO CS VCC D7 D6 D5 D4 D3 D2 D1 D0 RD WR A0 SEL1 GND
R73 3k
R74 3k
R75 3k
R76 3k
R77 3k
R78 3k
R79 3k
R80 3k
C24 0.1u
R2 10.0k
C1 0.1u
R1 20k
EVN5C
LCD7 LCD6 LCD5 LCD4 LCD3 LCD2 LCD1 LCD0 RD WR A0
ADC
U4 ADS931/SO
CLK OE PDN IN CM REFT LPBY LNBY REFB +VS +VS +VS LVDD AGND AGND AGND AGND
Vin = 1.5 to 3.5V
C9 0.1u
C13 0.1u
R34 3k
C10 0.1u
C11 0.1u
C12 0.1u
R35 3k
C14 0.1u
30mA
ADCCLK
D0 D1 D2 D3 D4 D5 D6 D7
USER
J15 CON6
USER-DIGA
USER-DIGB
USER-ANA
USER-ANB
JTAG
J13 CON10
TDI
RST
TMS
TDO
TCK
R41 100k
R40 100k
R51 100k
R44 100k
SW6 EVEKE2
EVEKE2
SW7
PZ1 CMT-1603
ARBITRARY WAVEFORM GENERATOR
C40 8p
R37 300k
R36 75k
R13 150k
AWG1
AWG2
C58 0.1u
U11A
J4 BNC
R71 100k
C59 0.1u
R59 75k
AD8039
AWG1: 0, 2V
AWG2: 0, 2V
VOUT = AWG1*4 + AWG2*2 - 6.14
SPI SRAM
U9 23K256
CS SO NC VSS VCC HOLD SCK SI
C60 0.1u
C-SCK
C-MOSI
C-MISO
C-SS
2.0V REF
R42 20k
2.5VREF
R39 75k
C8 0.1u
D9
C39 0.1u
R38 300k
LM4040D25
U11B AD8039
C2 0.1u
C3 0.1u
C43 C46 C47 C48 C49 C50 C51 C52 C53 C54
0.1u 0.1u 0.1u 0.1u 0.1u 0.1u 0.1u 0.1u 0.1u 0.1u
3x4 KEYPAD
J16 CON7
R1 R2 R3 R4 C1 C2 C3
M0 M1 M2 M3 M4 M5 M6
B3F-1052
SW2 SW3 SW4 SW5
M7
U1
ATXMEGA128A1
PORT A PORT B PORT C PORT D PORT E PORT F PORT H PORT J PORT K PORT R PORT Q
ADC A DAC A AC A0 AC A1 ADC B DAC B AC B0 AC B1
OSC/CLK Control
BOD VREF POR
Power Control
TEMP RTC OCD
AVR CPU
FLASH RAM
Reset Control
DMA
E²PROM
Watchdog
Interrupt Controller
Event System ctrl
DATA BUS
EVENT ROUTING NETWORK
External Bus Interface
PDN
OE
SELA2 SELA1 SELA0 SELB2 SELB1 SELB0
EXT-T
USER-DIGB
LED0 LED1 SD_WP CHSEL ADCCLK
TEST
J17
R17 4.99k
Q3 MMBT3904
R81 4.99k
R72 10k
Q1 MMBT3904
R19 10.0k
Q2 MMBT3906
D5 1N4148
R18 10.0k
R16 1.00k
R9 100k
R8 100k
R7 100k
R6 100k
E-MISO E-SCK E-MOSI E-SS
SD_WP SD_CD
P1 DSUB9F
SERIAL
SD CARD
J12 3M5646CT-ND
EXTERNAL TRIGGER
R43 3k
BNC J1
100k R45
CHANNEL SELECT
U13
A S VCC B1 B2 GND
SN74LVC1G3157
CHSEL
D1 LED0
D6 LED1
CHANNEL A
J2 BNC
C23 0.1u
C19 5p
R14 820k
C18 8p
R15 180k
U3B AD8039
3mA
R32 180k
R31 20k
R33 200
R28 5.9k
U3A
C20 1u
R48 10.0k
C15 15p
R47 10.0k
R30 1.00k
C27 39p
R29 1.00k
C22 15p
SW8 EG2451-ND
DC AC GND
U2 74HC4051
X7 X6 X5 X4 X3 X2 X1 X0 X VEE VDD GND EN C B A
2mA
R27 3k
R26 7.5k
R25 15k
R24 30k
R20 75k
R21 150k
R22 300k
R23 750k
5V / div
2V / div
1V / div
0.5V / div
0.2V / div
0.1V / div
50mV / div
20mV / div
C21 1u
C26 0.1u
C55 0.1u
SELB2 SELB1 SELB0
CHANNEL B
J3 BNC
C32 0.1u
C31 5p
R70 820k
C35 8p
R61 180k
U14B AD8039
R56 180k
R55 20k
R54 200
R60 5.9k
U14A
C36 1u
R46 10.0k
C45 15p
R49 10.0k
R52 1.00k
C44 39p
R50 1.00k
C33 1u
C28 0.1u
C56 0.1u
SELA2 SELA1 SELA0
R69 3k
R68 7.5k
R67 15k
R66 30k
R65 75k
R64 150k
R63 300k
R62 750k
C34 15p
SW9 EG2451-ND
MOUNTING HOLES
J5 J6 J7 J8
J10 J11
Gabotronics
January 2010
Size
Document Number
XMEGA DEVELOPMENT KIT / OSCILLOSCOPE
Rev 1.3
Date: Saturday, March 27, 2010
Sheet 1 of 1