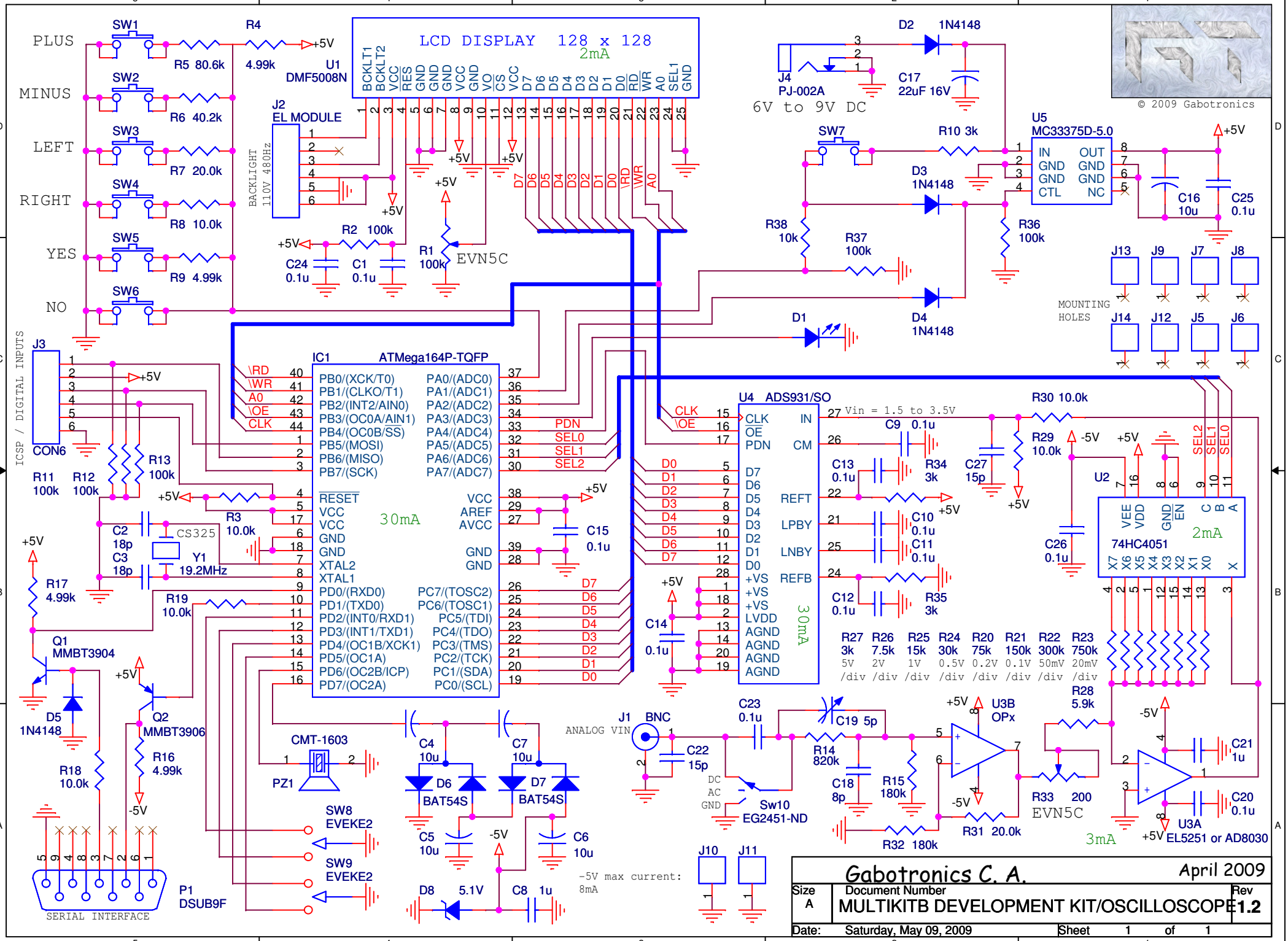
LCD DISPLAY 128 x 128
2mA
U1
DMF5008N
J2
EL MODULE
BACKLIGHT
110V 480Hz
EVN5C
PLUS
MINUS
LEFT
RIGHT
YES
NO
SW1
SW2
SW3
SW4
SW5
SW6
SW7
R4 4.99k
R5 80.6k
R6 40.2k
R7 20.0k
R8 10.0k
R9 4.99k
R2 100k
R1 100k
C24 0.1u
C1 0.1u
J4
PJ-002A
6V to 9V DC
D2 1N4148
C17 22uF 16V
U5
MC33375D-5.0
IN
GND
GND
CTL
OUT
GND
GND
NC
R10 3k
D3 1N4148
D4 1N4148
R38 10k
R37 100k
R36 100k
C16 10u
C25 0.1u
D1
J13
J9
J7
J8
J14
J12
J5
J6
MOUNTING HOLES
© 2009 Gabotronics
J3
CON6
ICSP / DIGITAL INPUTS
R11 100k
R12 100k
R13 100k
IC1 ATMega164P-TQFP
30mA
PB0/(XCK/T0)
PB1/(CLKO/T1)
PB2/(INT2/AIN0)
PB3/(OC0A/AIN1)
PB4/(OC0B/SS)
PB5/(MOSI)
PB6/(MISO)
PB7/(SCK)
RESET
VCC
VCC
GND
GND
XTAL2
XTAL1
PD0/(RXD0)
PD1/(TXD0)
PD2/(INT0/RXD1)
PD3/(INT1/TXD1)
PD4/(OC1B/XCK1)
PD5/(OC1A)
PD6/(OC2B/ICP)
PD7/(OC2A)
PA0/(ADC0)
PA1/(ADC1)
PA2/(ADC2)
PA3/(ADC3)
PA4/(ADC4)
PA5/(ADC5)
PA6/(ADC6)
PA7/(ADC7)
VCC
AREF
AVCC
GND
GND
PC7/(TOSC2)
PC6/(TOSC1)
PC5/(TDI)
PC4/(TDO)
PC3/(TMS)
PC2/(TCK)
PC1/(SDA)
PC0/(SCL)
\RD
\WR
A0
\OE
CLK
PDN
SEL0
SEL1
SEL2
R3 10.0k
C2 18p
C3 18p
CS325
Y1 19.2MHz
C15 0.1u
R17 4.99k
R19 10.0k
Q1 MMBT3904
D5 1N4148
Q2 MMBT3906
R18 10.0k
R16 4.99k
CMT-1603
PZ1
C4 10u
C7 10u
D6 BAT54S
D7 BAT54S
C5 10u
C6 10u
D8 5.1V
C8 1u
SW8 EVEKE2
SW9 EVEKE2
P1 DSUB9F
SERIAL INTERFACE
U4 ADS931/SO
CLK
OE
PDN
D7
D6
D5
D4
D3
D2
D1
D0
+VS
+VS
+VS
LVDD
AGND
AGND
AGND
AGND
IN
CM
REFT
LPBY
LNBY
REFB
30mA
Vin = 1.5 to 3.5V
C9 0.1u
C13 0.1u
R34 3k
C10 0.1u
C11 0.1u
C12 0.1u
R35 3k
C14 0.1u
R30 10.0k
R29 10.0k
C27 15p
C26 0.1u
U2
74HC4051
VEE
VDD
GND
EN
2mA
R27 3k 5V /div
R26 7.5k 2V /div
R25 15k 1V /div
R24 30k 0.5V /div
R20 75k 0.2V /div
R21 150k 0.1V /div
R22 300k 50mV /div
R23 750k 20mV /div
R28 5.9k
J1 BNC
ANALOG VIN
C22 15p
C23 0.1u
C19 5p
R14 820k
C18 8p
R15 180k
R32 180k
DC
AC
GND
Sw10 EG2451-ND
U3B OPx
R31 20.0k
R33 200
EVN5C
3mA
U3A
EL5251 or AD8030
C21 1u
C20 0.1u
-5V max current: 8mA
J10
J11
Gabotronics C. A.
April 2009
Size A
Document Number
MULTIKITB DEVELOPMENT KIT/OSCILLOSCOPE
Rev 1.2
Date: Saturday, May 09, 2009
Sheet 1 of 1